BIXOLON®

User's Manual

SRP-F310/312/313II

Front Exit Thermal Printer
Rev. 1.02

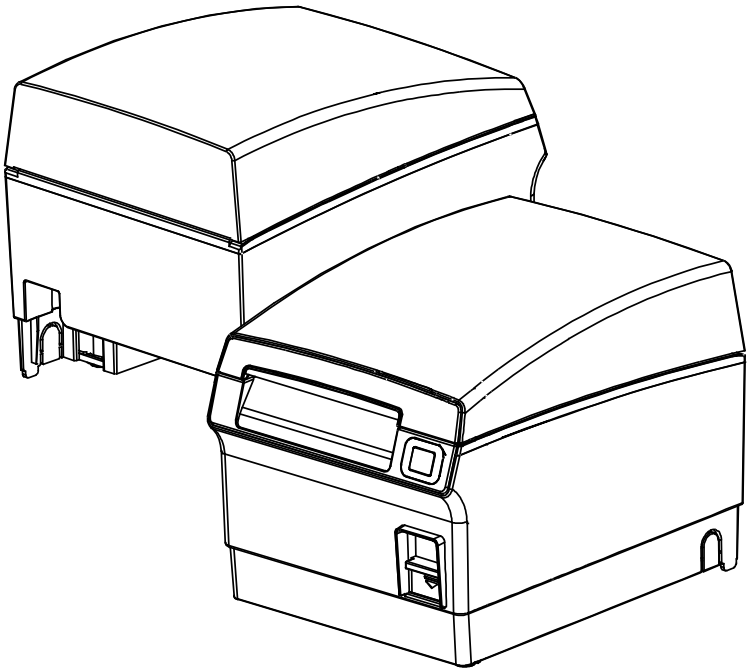

http://www.bixolon.com

■ Safety Precautions

In using the present appliance, please keep the following safety regulations in order to prevent any hazard or material damage.

WARNING

Violating following instructions can cause serious injury or death.

Do not plug several products in one multi-outlet.
- This can provoke over-heating and a fire.
- If the plug is wet or dirty, dry or wipe it before usage.
- If the plug does not fit perfectly with the outlet, do not plug in.
- Be sure to use only standardized multi-outlets.

PROHIBITED

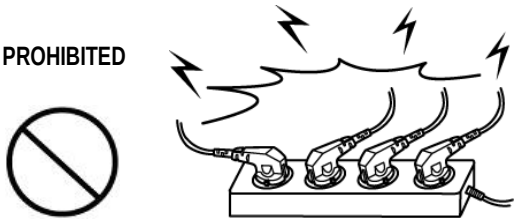

You must use only the supplied adapter.
- It is dangerous to use other adapters.

PROHIBITED

Do not pull the cable to unplug.
- This can damage the cable, which is the origin of a fire or a breakdown of the printer.

PROHIBITED

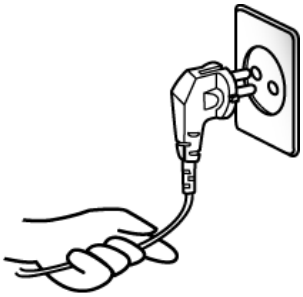

Keep the plastic bag out of children's reach.
- If not, a child may put the bag on his head.

PROHIBITED

Do not plug in or unplug with your hands wet.
- You can be electrocuted.

PROHIBITED

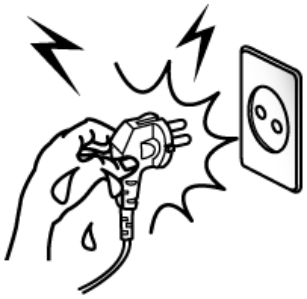

Do not bend the cable by force or leave it under any heavy object.
- A damaged cable can cause a fire.

PROHIBITED

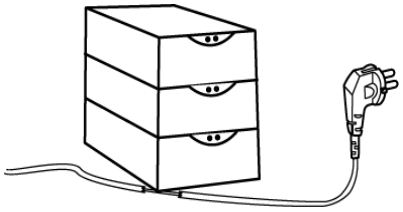

CAUTION

Violating following instructions can cause slight wound or damage the appliance.

If you observe a strange smoke, odor or noise from the printer, unplug it before taking following measures.

- Switch off the printer and unplug the set from the mains.
- After the disappearance of the smoke, call your dealer to repair it.

TO UNPLUG

Keep the desiccant out of children's reach.

- If not, they may eat it.

PROHIBITED

Install the printer on the stable surface.

- If the printer falls down, it can be broken and you can hurt yourself.

PROHIBITED

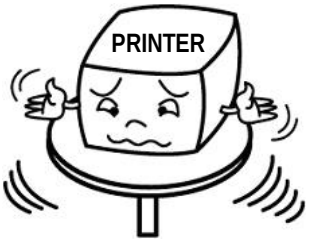

Use only approved accessories and do not try to disassemble, repair or remodel it for yourself.

- Call your dealer when you need these services.
- Do not touch the blade of auto cutter.

DISASSEMBLING PROHIBITED

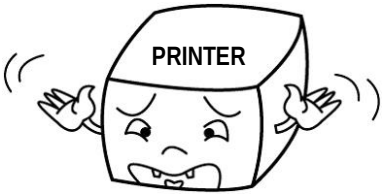

Do not let water or other foreign objects in the printer.

- If this happened, switch off and unplug the printer before calling your dealer.

PROHIBITED

Do not use the printer when it is out of order. This can cause a fire or an electrocution.

- Switch off and unplug the printer before calling your dealer.

TO UNPLUG

■ Warning - U.S.A

i) Class B Digital Device
This equipment has been tested and found to comply with the limits for a Class B digital device, pursuant to part 15 of the FCC Rules. These limits are designed to provide reasonable protection against harmful interference in a residential installation This equipment generates, uses and can radiate radio frequency energy and, if not installed and used in accordance with the instructions, may cause harmful interference to radio communications, However, there is no guarantee that interference will not occur in a particular installation. If this equipment does cause harmful interference to radio or television reception, which can be determined by turning the equipment off and on, the user is encouraged to try to correct the interference by one or more of the following measures:
- Reorient or relocate the receiving antenna.
- Increase the separation between the equipment and receiver.
- Connect the equipment into an outlet on a circuit different from that to which the receiver is connected.
- Consult the dealer or an experienced radio/TV technician for help.

ii) Changes or modifications not expressly approved by the manufacturer could void the user's authority to operate the equipment.

iii) Cation: Exposure to Radio Frequency Radiation.
To comply with FCC RF exposure compliance requirements, a separation distance of at least 20 cm must be maintained between the antenna of this device and all persons.

■ Notice - Canada

This Apparatus complies with class "B" limits for radio interference as specified in the Canadian department of communications radio interference regulations.
Get appareil est conforme aux normes class "B" d'interference radio tel que specifier par ministre canadien des communications dans les reglements d'interference radio.

■ Caution

Some semiconductor devices are easily damaged by static electricity. You should turn the printer "OFF", before you connect or remove the cables on the rear side, in order to guard the printer against the static electricity. If the printer is damaged by the static electricity, you should turn the printer "OFF".

■ Waste Electrical and Electric Equipment (WEEE)

This marking shown on the product or its literature, indicates that is should not be disposed with other household wastes at the end of its working life, To prevent possible harm to the environment or human health from uncontrolled waste disposal, please separate this from other types of wastes and recycle it responsibly to promote the sustainable reuse of material resources. Household users should contact either the retailer where they purchased this product, or their local government office, for details of where and how they can take this item for environmentally safe recycling. Business users should contact their supplier and check the terms and conditions of the purchase contract. This product should not be mixed with other commercial wastes for disposal.

■ Rating Label Symbol Information

DC (Direct current)

■ Notice

This device complies with Part 15 of the FCC Rules. Operation is subject to the following two conditions:

(1) This device may not cause harmful interference, and
(2) This device must accept any interference received, including interference that may cause undesired operation.

■ Label Material

* Control Label: PC
* Other Labels: PET

■ Introduction

SRP-F310/312/313II series printers have been designed to be connected to various types of electronic devices such as ECR (Electronic Cash Register), POS (Point Of Sales), and computer peripheral devices.

1. High speed printing: 82.74/93.33 lines per second.

2. Low noise thermal printing.

3. Support of USB & Ethernet (built-in type), serial, parallel, POWERED USB, Wireless LAN, and Bluetooth interfaces

4. The data buffer allows the unit to receive print data even during printing.

5. Peripheral units drive circuit enables control of external devices such as cash drawer.

6. Bar code printing is possible by using a bar code command.

7. Different print densities can be selected by DIP switches.

※ For network information, refer to the 'Network user manual'

Please be sure to read the instruction in this manual carefully before using your new SRP-F310/312/313II

※ Use only authorized supplies that can be trusted!
- We are not responsible for quality and service for damage caused by the use of unauthorized products(or recycled ones).
- The following Bluetooth mark and QD ID B021701 is only applicable to models with the Bluetooth SIG qualification.

We at BIXOLON maintain ongoing efforts to enhance and upgrade the functions and quality of all our products. In following, product specifications and/or user manual content may be changed without prior notice.

■ Table of Contents

1. Setting Up the Printer 8
1-1 Unpacking 8
1-2 Interface 9
1-2-1 USB Interface 9
1-2-2 Ethernet Interface 9
1-2-3 Serial Interface (RS-232C) 10
1-2-3-1 Single Interface 10
1-2-3-2 Dual Interface 10
1-2-4 Parallel Interface (IEEE1284) 12
1-2-5 Powered USB Interface 13
1-2-6 Bluetooth / WLAN Interface 13
1-2-6-1 Bluetooth Interface 13
1-2-6-2 Wireless LAN Interface 14
1-3 Connecting the Drawer 14
1-4 Setting the Dip Switches 15
1-4-1 Serial Interface 15
1-4-2 Parallel / USB / Ethernet / Wireless LAN / Powered USB Interface 15
1-4-3 Bluetooth Interface 15
1-5 Installing or Replacing the Paper 17
1-6 Using 83mm Paper 19
1-7 Recommended Papers 19
1-8 Using the Printer 20
1-9 Connecting the Computer 20
1-10 Connecting the Power Supply 21

2. Self Test 22

3. Hexadecimal Dumping 23

4. Specification 24

5. Appendix 25
5-1 Cleaning Printer 25

1. Setting Up the Printer

1-1 Unpacking

Your printer box should include these items.
If any items are damaged or missing, please contact your dealer for assistance.

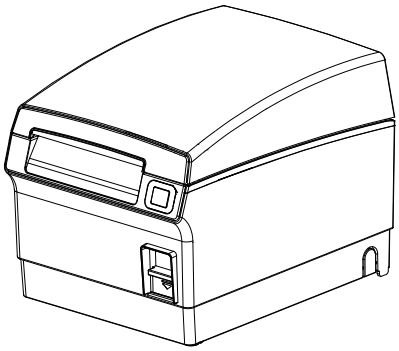

SRP-F310/312/313II

CD

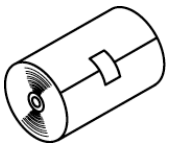

Roll Paper

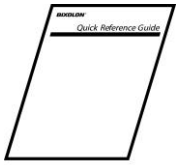

Manual

Power Cord

1-2 Interface

You can connect up the three cables to the printer.
They all connect to the connector panel on the back of the printer, which is shown below:

※ CAUTIONS
Before connecting any of the cables, make sure that both the printer and the host are turned off.

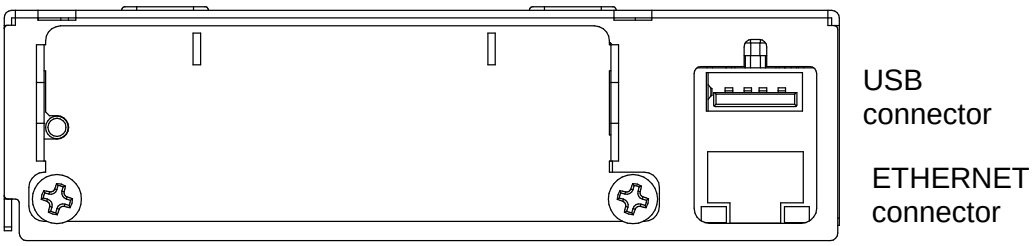

1-2-1 USB Interface

Pin No.	Signal Name	Assignment (Color)	Function
Shell	Shield	Drain Wire	Frame Ground
1	VBUS	Red	Host Power
2	D-	White	Data Line (D-)
3	D+	Green	Data Line (D+)
4	GND	Black	Signal Ground

1-2-2 Ethernet Interface

Pin No.	Signal Name	Color	Function
1	TD+	WHITE ORANGE	Transmit +
2	TD-	ORANGE	Transmit -
3	TCT	WHITE GREEN	Receive +
4	NC	BLUE	-
5	NC	WHITE BLUE	-
6	RCT	GREEN	Receive -
7	RD+	WHITE BROWN	-
8	RD-	BROWN	-

* IP and MAC information can be obtained from the self-test. Refer to the Ethernet User's Manual that is available from the BIXOLON website for more detailed information.
* For using this interface in the Bluetooth or WLAN applied product, Printer wiring requires to use double shielded (Cat 7) Ethernet cable.

1-2-3 Serial Interface (RS-232C)

1-2-3-1 Single Interface

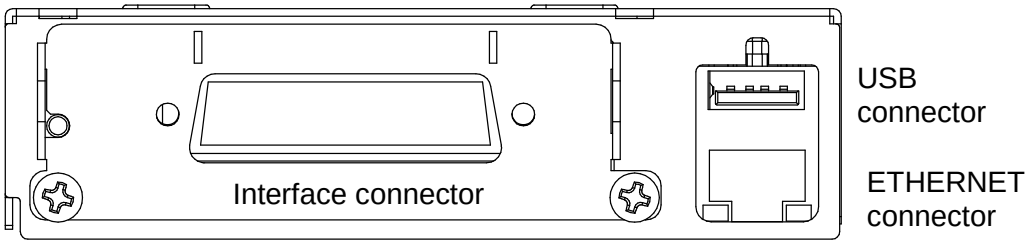

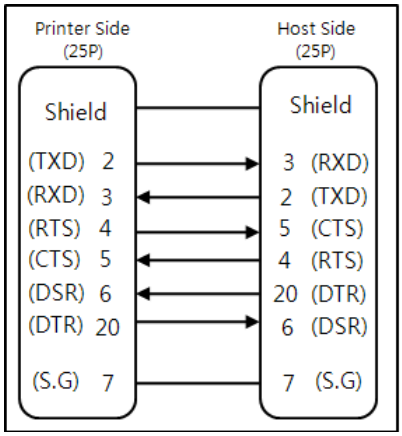

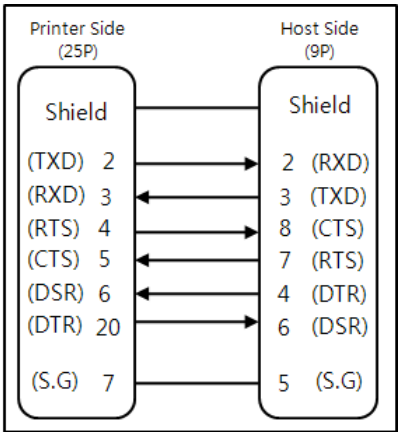

1-2-3-2 Dual Interface

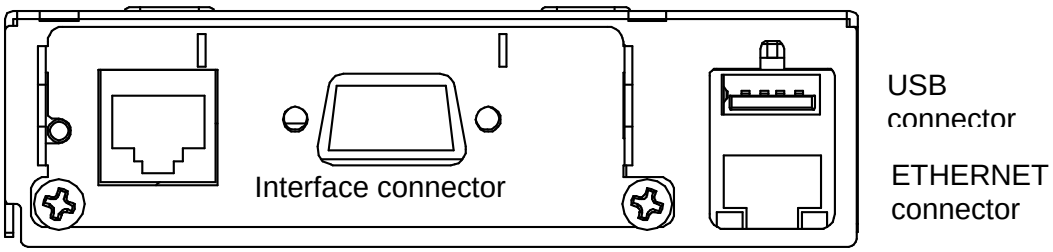

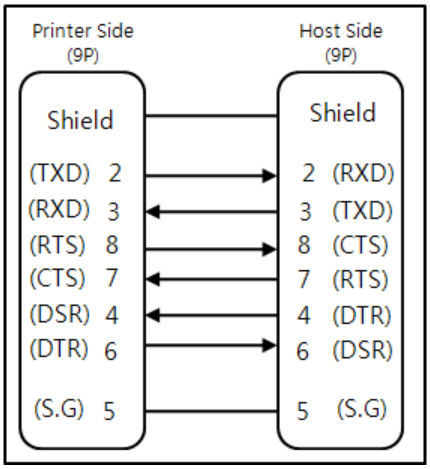

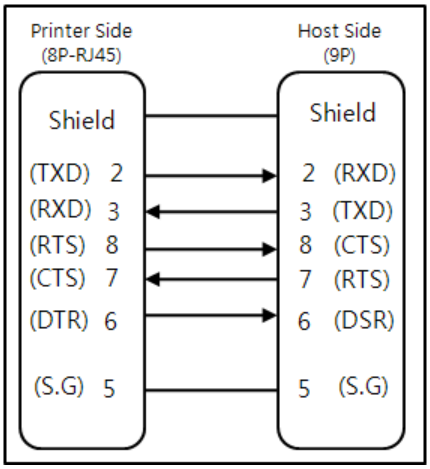

Pin No.	Signal Name	Direction	Function
Main	Frame GND	-	Frame Ground
2	TXD	Output	Data Transmission
3	RXD	Input	Data Reception
6	DSR	Input	This signal shows whether the host computer can receive data (hardware flow control). 1) MARK (Logic 1): The host computer can receive data. 2) SPACE (Logic 2): The host computer cannot receive data. 3) After checking the signal in the printer, it transmits data to the host. 4) When XON / XOFF flow control is selected, the printer does not confirm this signal.
7	Signal GND	-	Signal Ground
20	DTR	Output	This signal shows whether the printer works or not (hardware flow control). 1) MARK (Logic 1): Printer is working. 2) SPACE (Logic 2): Printer is not working. 3) After checking the signal in the printer, it transmits data to the host. 4) When XON/XOFF flow control is selected, the printer does not confirm this signal.
Shield	Frame GND	-	Frame Ground

1-2-4 Parallel Interface (IEEE1284)

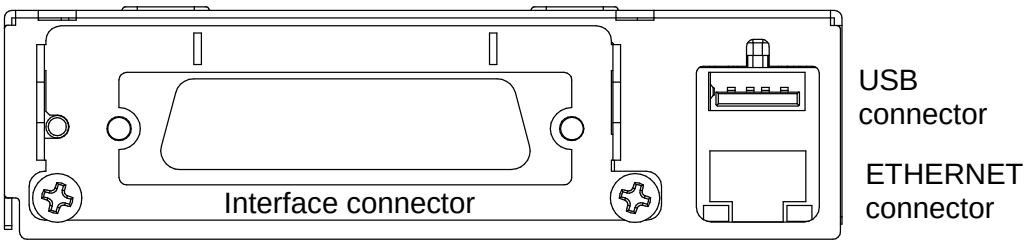

Pin No.	Source	Compatibility Mode	Nibble Mode	Byte Mode
1	Host	nStrobe	HostClk	HostClk
2	Host / Printer	Data 0 (LSB)	-	Data 0 (LSB)
3	Host / Printer	Data 1	-	Data 1
4	Host / Printer	Data 2	-	Data 2
5	Host / Printer	Data 3	-	Data 3
6	Host / Printer	Data 4	-	Data 4
7	Host / Printer	Data 5	-	Data 5
8	Host / Printer	Data 6	-	Data 6
9	Host / Printer	Data 7 (MSB)	-	Data 7 (MSB)
10	Printer	nAck	PtrClk	PtrClk
11	Printer	Busy	PtrBusy / Data3,7	PtrBusy
12	Printer	Perror	AckDataReq / Data2,6	AckDataReq
13	Printer	Select	Xflag / Data1,5	Xflag
14	Host	nAutoFd	HostBusy	HostBusy
15	-	NC	NC	NC
16	-	GND	GND	GND
17	-	FG	FG	FG
18	Printer	Logic-H	Logic-H	Logic-H
19~30	-	GND	GND	GND
31	Host	nInit	nInit	nInit
32	Printer	nFault	nDataAvail / Data0,4	nDataAvail
33	-	GND	ND	ND
34	Printer	DK_Status	ND	ND
35	Printer	+5V	ND	ND
36	Host	nSelectIn	1284-Active	1284-Active

1-2-5 Powered USB Interface

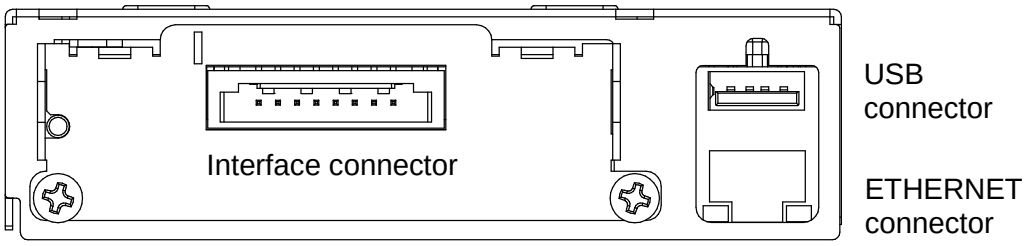

Pin No.	Signal Name	Function
Shield	Shield	Frame Ground
1	PGND	Main Power Ground
2	VPP24V	Main Power
3	GND	Signal Ground
4	D+	Data Line (D+)
5	D-	Data Line (D-)
6	VBUS	Hose Power
7	VPP24V	Main Power
8	PGND	Main Power Ground

* For cable and connector information, refer to the web-site (www.powered.org)
* In case of using Powered USB interface, the other USB interface provided by default is not useful. (In this case, USB communication is only available through the Powered USB)

1-2-6 Bluetooth / WLAN Interface

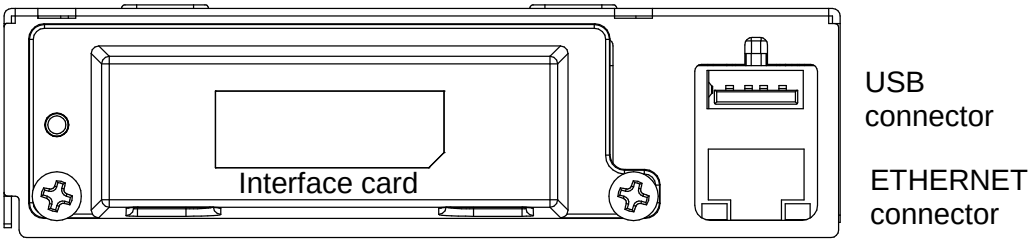

1-2-6-1 Bluetooth Interface

1) Bluetooth Communication Specifications

Item	Specifications
Frequency	2.402~2.480 GHz
Version	2.1 + EDR
Module Type	Class 1

2) Bluetooth Connection
Printer can be connected to terminal devices with Bluetooth communication capability (PDA, PC, smartphone, tablet PC, etc.)

* Refer to the Bluetooth Connection Manual for more detailed instructions about how to establish the connection.

1-2-6-2 Wireless LAN Interface

1) Wireless LAN Communication Specifications

Item	Specifications
Frequency	2.412~2.484 GHz
Channel	Channel 1~13
Protocol	802.11b, 802.11g, 802.11n

2) Connecting Wireless LAN
Printer can be connected to terminal devices with wireless LAN communication capability (PDA, PC, smartphone, tablet PC, etc.).

* Refer to the Wireless LAN Connection Manual for more detailed instructions about how to establish the connection.

1-3 Connecting the Drawer

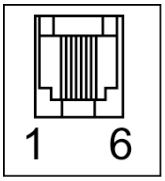

Connect the cash drawer connecting cable to the cash drawer connection in the rear of the printer.

※ WARNING
Use a drawer that matches the printer specification.
Using an improper drawer may damage the drawer as well as the printer.

※ CAUTIONS
Do not connect a telephone line to the drawer kick-out connector.
Otherwise, the telephone line and the computer may be damaged.

Pin No.	Signal name	Direction
1	Frame ground	-
2	Drawer kick- out drive signal 1	Output
3	Drawer open/close signal	Input
4	+24V	-
5	Drawer kick- out drive signal 2	Output
6	Signal ground	-

1-4 Setting the Dip Switches

1-4-1 Serial Interface

• DIP Switch 1

SW	Function	ON	OFF	Default
1-1	Auto-Cutter Selection	Disable	Enable	OFF
1-2	Handshaking	XON / OFF	DTR / DSR	OFF
1-3	Word length	7 bits	8 bits	OFF
1-4	Parity check	Yes	No	OFF
1-5	Parity selection	EVEN	ODD	OFF
1-6	Baud rate selection	Refer to the Following Table 1		OFF
1-7				ON
1-8				OFF

1-4-2 Parallel / USB / Ethernet / Wireless LAN / Powered USB Interface

• DIP Switch 1

SW	Function	ON	OFF	Default
1-1	Auto-Cutter Selection	Disable	Enable	OFF
1-2 ~ 1-8	Reserved	-	-	OFF

1-4-3 Bluetooth Interface

• DIP Switch 1

SW	Function	ON	OFF	Default
1-1	Auto-Cutter Selection	Disable	Enable	OFF
1-2	Reserved	-	-	OFF
1-3	SSP Mode	Enabled	Disabled	OFF
1-4	Reserved	-	-	OFF
1-5	Reserved	-	-	OFF
1-6	Reserved	-	-	OFF
1-7	Reserved	-	-	ON
1-8	Reserved	-	-	OFF

Transmission speed	SW1 – 6	SW1 – 7	SW1 – 8	Default
2400 baud	ON	OFF	OFF	9600
4800 baud	ON	OFF	ON	
9600 baud	OFF	ON	OFF	
19200 baud	OFF	OFF	OFF	
38400 baud	OFF	ON	ON	
57600 baud	OFF	OFF	ON	
115200 baud	ON	ON	ON	

Table 1 - Baud Rate Selection

※ Auto Cutter Enable / Disable selection

Dip Switch Set 1		
SW1 - 1	ON	Auto Cutter Disable
	OFF	Auto Cutter Enable
Application	Ignores Auto Cutter error for continuous printing	

※ Attention

The printer must be turned off when changing the DIP switch settings. Failure to turn it off may cause a short circuit and damage the printer.

To change the settings:

1) Turn off the printer.
2) Open the DIP switch cover located at the back of the printer.
3) Set the DIP switch number.
4) Close the DIP switch cover after the settings have been completed.
5) Position the printer in front and turn it on.

※ Note

Please make sure that the printer is turned off when changing the DIP switch settings. The change is not accepted when the power is on.

1-5 Installing or Replacing the Paper

※ CAUTIONS
Be sure to use paper rolls that meet the specifications. Do not use paper rolls that have the paper glued to the core because the printer may not detect the paper end correctly.

Do not use paper wider than 80 mm or plastic paper tube when using a printer that specifies 80 mm paper.

1-5-1 Make sure that the printer is not receiving data; otherwise, data may be lost.

1-5-2 Open the paper roll cover by pressing the Push button.

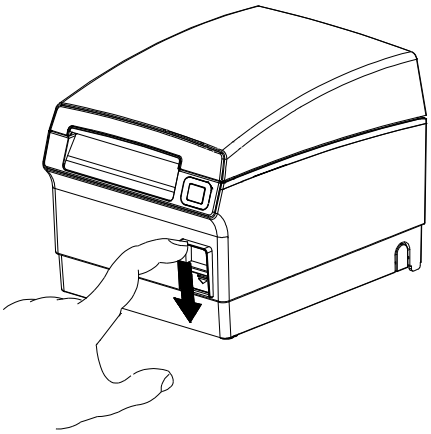

※ CAUTIONS
Do not open the print cover while the printer is operating. This may damage the printer.

1-5-3 Remove any existing used paper roll core when replacing the paper roll

1-5-4 Insert the paper roll as shown.

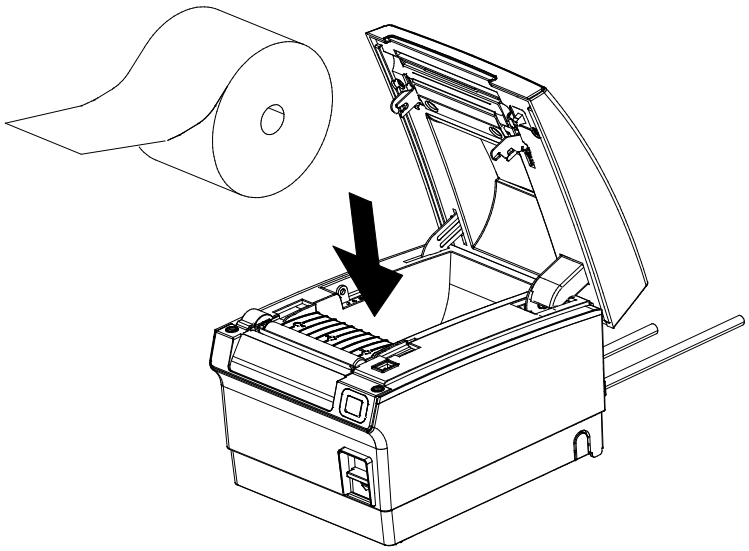

1-5-5 Check the orientation of the roll paper when inserting it into the printer.

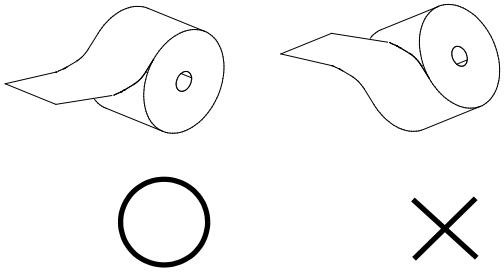

1-5-6 Pull out a small amount of paper, as shown. Then close the cover.

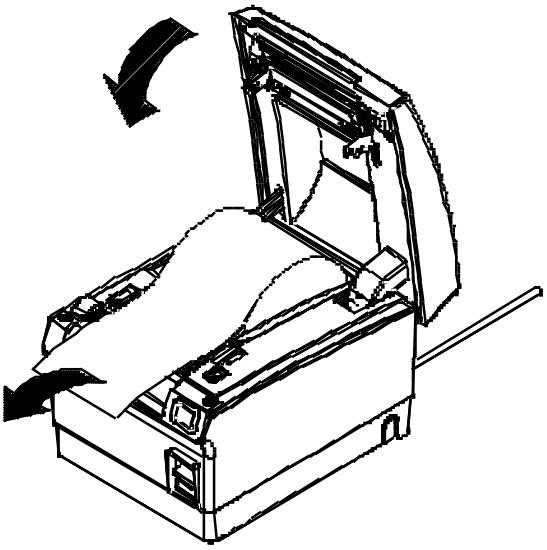

※ CAUTIONS
When closing the cover, press the center of printer cover firmly to prevent paper miss-loading.

1-5-7 Tear off the paper as shown.

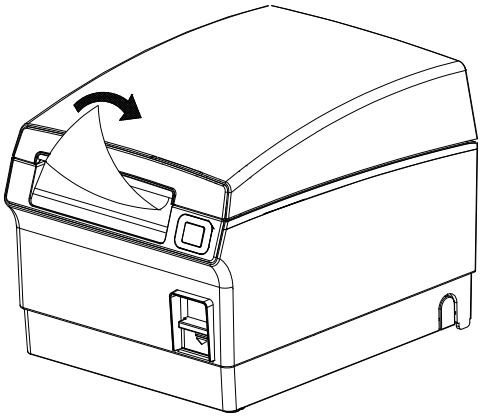

1-6 Using 83mm Paper

Use of the partition depends on the width of the paper.

1-6-1 Remove the partition as shown in the following picture when using 83 mm paper.

※ NOTE
Partition is installed at the factory for 80 mm paper.

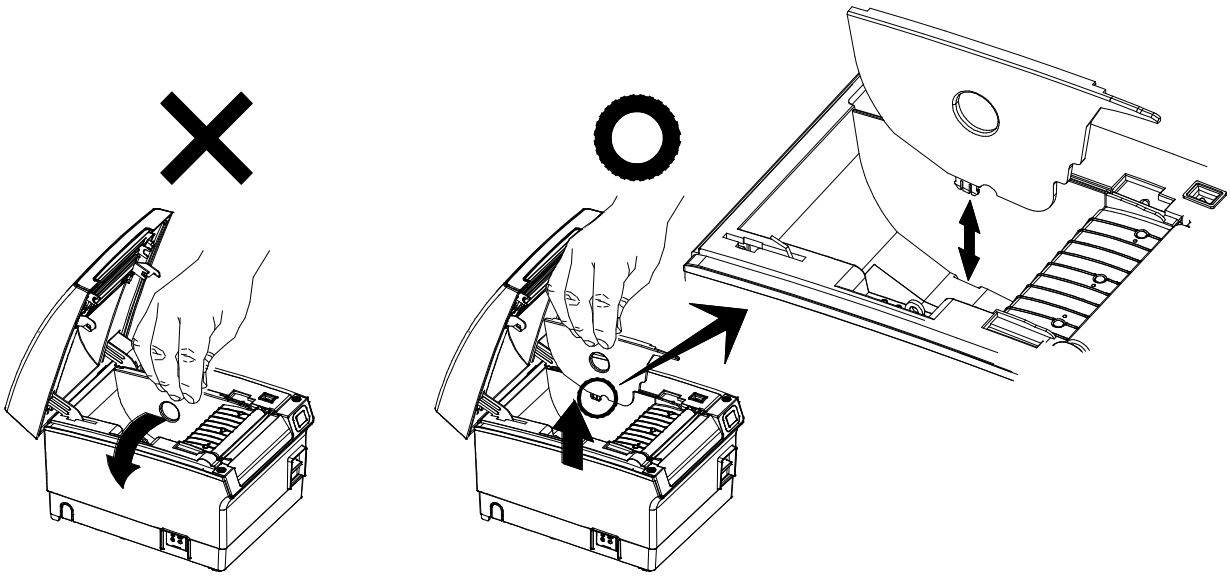

Fig 1 Fig 2

※ CAUTIONS
Do not rotate the partition while removing it from the printer as shown in Fig 1 because the holder may be damaged. Lift up the partition as shown in Fig 2 to remove it safely.

1-6-2 The rest of the installation process after this step is the same as the procedure described in 1-5.

1-7 Recommended Papers

- TF50KS-E (Paper Thickness: 65μm): Nippon Paper Industries Co., Ltd.
- PD 160R (Paper Thickness: 75μm): New Oji Paper Mfg. Co., Ltd.
- P350 (Paper Thickness: 62μm): Kansaki Specialty Paper, Inc. (USA)

※ CAUTIONS
Use of papers other than those recommended above may damage TPH or degrade the printing quality and our company is not responsible for the damage caused by non-recommended papers. If you have to use other products, we recommend that you use papers with a similar level of quality to the recommended ones.

1-8 Using the Printer

Control Panel

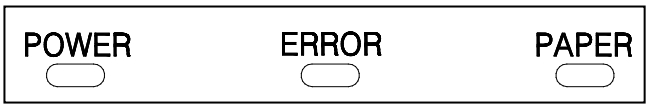

○ POWER
The POWER light is on whenever the printer is on.

○ ERROR
This indicates an error.

○ PAPER
This light indicates the near end of the paper roll. Install a new paper roll and the printer will continue printing. When the light blinks, it indicates the self-test printing standby state or macro execution Standby state when the macro execution command is used.

○ FEED
Press the FEED button once to advance paper one line. You can also hold down the FEED button to feed paper continuously.

1-9 Connecting the Computer

You need an appropriate interface cable.

1-9-1 Plug the cable connector securely into the printer’s interface connector.

1-9-2 Tighten the screws on both sides of the cable connector.

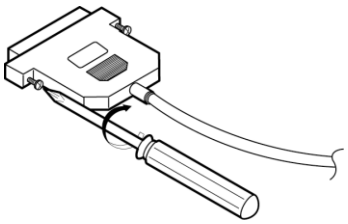

1-9-3 Attach the other end of the cable to the computer.

1-10 Connecting the Power Supply

※ CAUTIONS

When connecting or disconnecting the power supply from the printer, make sure that the power supply is not plugged into an electrical outlet. Otherwise you may damage the power supply or the printer.

If the power supply's rated voltage and your outlet's voltage do not match, contact your dealer for assistance. Do not plug in the power cord. Otherwise, you may damage the power supply or the printer.

1-10-1 Make sure that the printer's power switch is turned off, and the power supply's power cord is unplugged from the electrical outlet.

1-10-2 Check the label on the power supply to make sure that the voltage required by the power supply matches that of your electrical outlet.

1-10-3 Plug in the power supply's cable as shown below. Notice that the flat side of the plug faces down.

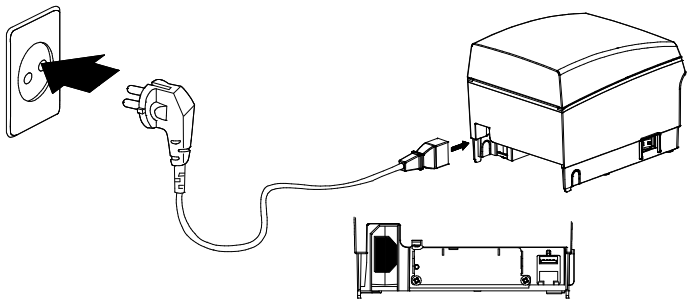

※ NOTE

To remove the DC cable connector, make sure that the power supply's power cord is unplugged; then grasp the connector at the arrow and pull it straight out.

2. Self Test

The self-test checks whether the printer has any problems.
If the printer does not function properly, contact your dealer. The self-test checks the following:

2-1 Make sure paper roll has been installed properly.

2-2 Turn on the power while holding down the FEED button with beep.
The self-test begins.

2-3 The self-test prints the current printer status, which provides the control ROM version and the DIP switch setting.

2-4 After printing the current printer status, self-test printing will print the following, and pause (The PAPER LED light blinks).

SELF-TEST PRINTING.
PLEASE PRESS THE FEED BUTTON.

2-5 Press the FEED button to continue printing.
The printer prints a pattern using the built-in character set.

2-6 The self-test automatically ends and cuts the paper after printing the following.

***** COMPLETED *****

2-7 The printer is ready to receive data as soon as it completes the self-test.

3. Hexadecimal Dumping

This feature allows experienced users to see exactly what data is coming to the printer. This can be useful in finding software problems. When you turn on the hexadecimal dump function, the printer prints all commands and data in hexadecimal format along with a guide section to help you find specific commands.

To use the hexadecimal dump function, follow these steps.

3-1 After you make sure that the printer is off, open the cover.

3-2 Turn on the printer, while holding down the FEED button with beep.

3-3 Close the cover, then the printer enters the hexadecimal dump mode.

3-4 Run any software program that sends data to the printer. The printer will print all the codes it receives in a two-column format. The first column contains the hexadecimal codes and the second column gives the ASCII characters that corresponds to the codes.

```
1B 21 00 1B 26 02 40 40 40 40     . ! . . & . @ @ @ @
02 0D 1B 44 0A 14 1E 28 28 28     . . . D . . . . ( ( (
00 01 0A 41 0D 42 0A 43 43 43     . . . A . B . C C C
```

A period (.) is printed for each code that has no ASCII equivalent.
During the hex dump, all commands except DLE EOT and DLE ENQ are disabled.

3-5 When the printing finishes, turn off the printer.

3-6 Turn on the printer and then the hexadecimal mode is off.

4. Specification

Printing method		Thermal line printing
Dot density		SRP-F310II: 180dpi(7dots/mm) SRP-F312II: 203dpi(8dots/mm) SRP-F313II: 203dpi(8dots/mm)
Printing width		SRP-F310II: 72mm SRP-F312II: 72mm SRP-F313II: 80mm
Paper width		79.5±0.5mm/82.5±0.5mm
Characters per line (default)		SRP-F310II: 42(Font A), 56(Font B) SRP-F312II: 48(Font A), 64(Font B) SRP-F313II :53(Font A), 71(Font B)
Printing speed		SRP-F310II: 82.74 lines/sec, Max. 350mm/sec SRP-F312II: 93.33 lines/sec, Max. 350mm/sec SRP-F313II: 93.33 lines/sec, Max. 350mm/sec
Receive Buffer Size		4K Bytes
※ **NOTE:** Printing speed may be slower, depending on the data transmission speed andthe combination of control commands.		
Supply voltage	SMPS Input voltage	100~240VAC
	Frequency	50/60Hz
	SMPS Output voltage	24VDC
Environmental Conditions	Temperature	0~40 ℃ (Operating) -20~60 ℃ (Storage)
	Humidity	10~80 % RH (Operating) 10~90 % RH (Storage) ; Except for paper
LIFE *	Printer Head *)	250 Km
	Auto Cutter	3,000,000 Cut
MCBF *	Printer Mechanism *)	70,000,000 lines

***) The specifications were determined based on operation at normal temperature using designated paper on default settings. They are subject to change depending on temperature or printing level.**

***) The specifications were tested according to standard reliability. If you want to test the product to determine its life cycle, please contact us for more details and comply with the standard reliability for testing.**

** The switch is the disconnecting device. Turn off switch from any hazard.

5. Appendix

5-1 Cleaning Printer

Paper dust inside the printer may lower the print quality. In this case clean the printer as follows:

5-1-1 Open the printer cover and remove any paper.

5-1-2 Clean the print head with a cotton swab moistened with alcohol solvent.

5-1-3 Clean the paper sensor and paper roller with a cotton swab and a dry cloth.

5-1-4 Insert a paper roll and close the printer cover.

The remaining amount of paper detected by paper near-end sensor varies with the diameter of the paper core. To set the paper near-end sensor, contact your dealer.